DRAWING MADE IN THIRD ANGLE PROJECTION

THIS DRAWING IS UNPUBLISHED. RELEASED FOR PUBLICATION ,19 .

© COPYRIGHT 19 BY AMP INCORPORATED. ALL INTERNATIONAL RIGHTS RESERVED.

MOD	LOC	DIST
8	BD	39

REVISIONS					
P	F	ZONE	LTR	DESCRIPTION	DATE	APPD
✓	✓		A	REDRAWN ON CAD	4-16-90	–

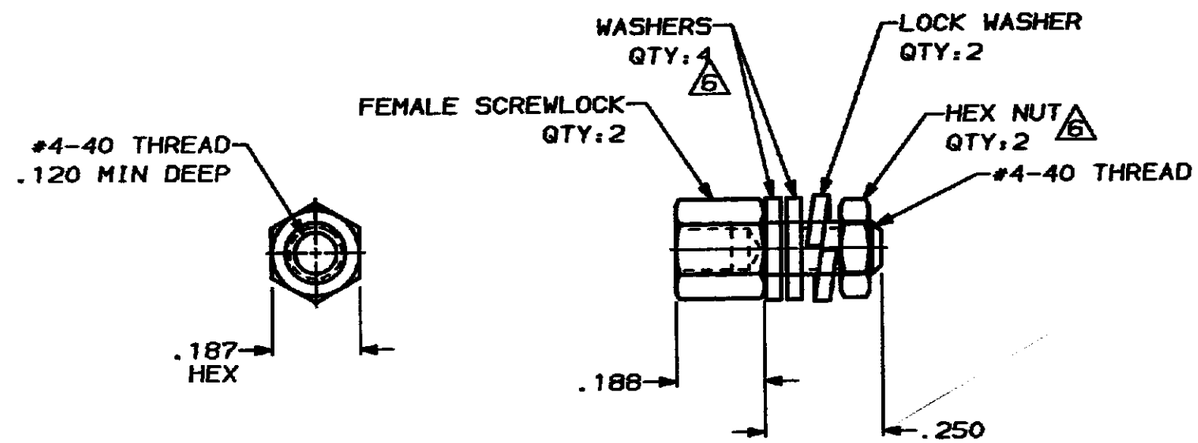

OBSOLETE	5 6	2	745563-5
	5	2	745563-4
	4	2	745563-3
	5	1	745563-2
	4	1	745563-1
	PACKAGING	FINISH	PART NUMBER

1. ZINC PLATED PER ASTM B633, TYPE II, CLASS SCI, YELLOW CHROMATE.
2. ZINC PLATED PER ASTM B633, TYPE III, CLASS SCI, CLEAR CHROMATE.
3. PARTS PACKAGED UNASSEMBLED.
4. PARTS PACKAGED AS A UNIT KIT.
5. PARTS INDIVIDUALLY BULK PACKED & SHIPPED AS A UNIT PACKAGE.
6. WASHERS & HEX NUTS ARE NOT INCLUDED.

DO NOT SCALE PRINT. UNLESS SPECIFIED DIMENSIONS IN INCHES TOLERANCES ON: 2 PLC DEC ± – 3 PLC DEC ± .005 ANGLES ± –

MATERIAL: STEEL PER PER A108

FINISH: SEE TABLE

DR 4-16-90 J GALLUCCI 90
CHK 4-17-90
APPD 7-16-90
APPD 7-16-90
PRODUCT SPEC –
APPLICATION SPEC –
WEIGHT –

AMP INCORPORATED
Harrisburg, Pa. 17105

NAME: KIT, SCREWLOCK, FEMALE, PLASTIC OR METAL SERIES, SHORT, AMPLIMITE™ HDE

SIZE	PSCN NO	DRAWING NO
B	00779	745563
SCALE 4:1		SHEET 1 OF 1

CUSTOMER DRAWING

AMP 1-470-15 REV 3-88